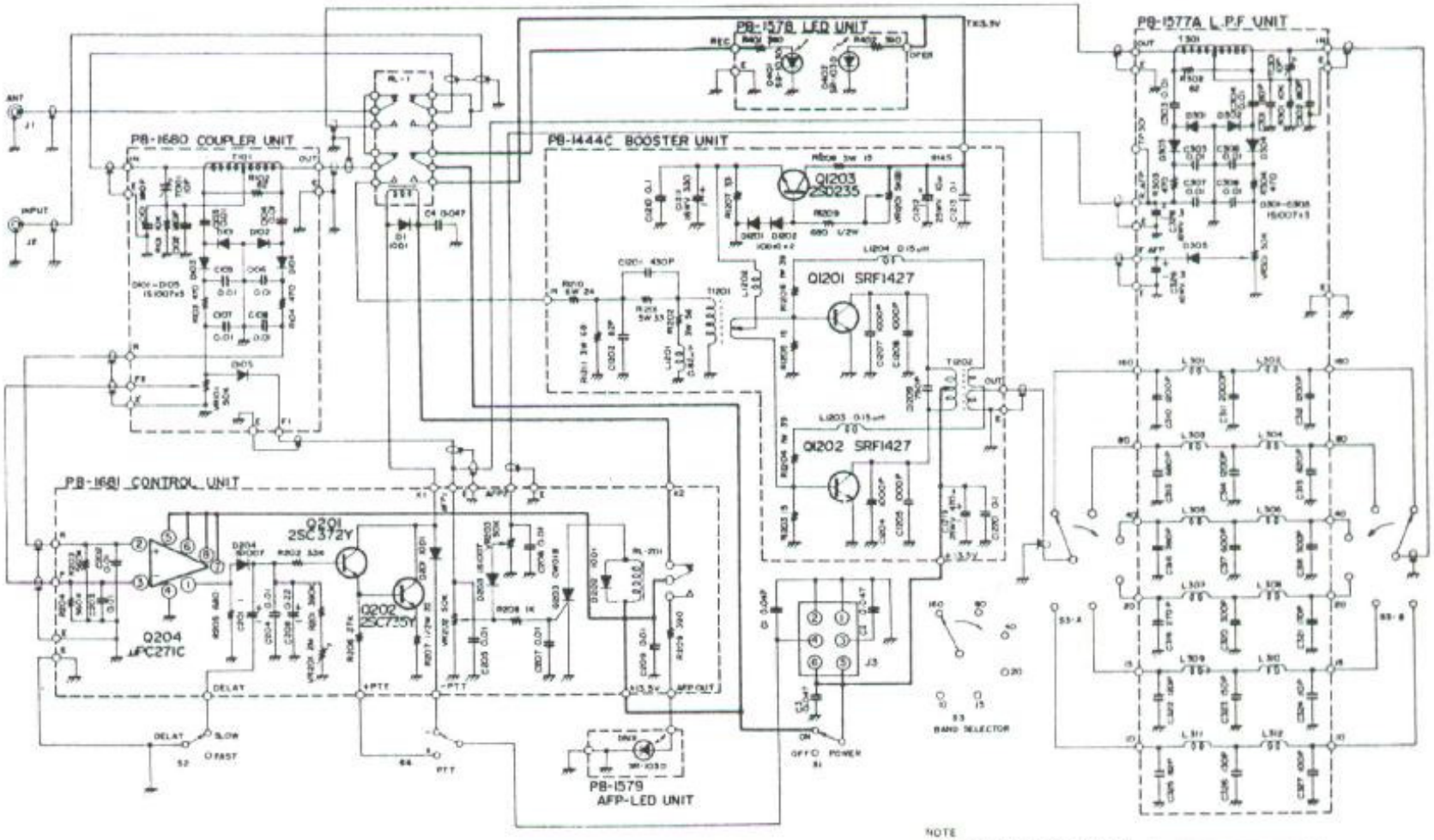

NOTE
1. ALL RESISTORS IN Ω 1/4W ±10% UNLESS OTHERWISE NOTED
2. ALL CAPACITORS IN μF UNLESS OTHERWISE NOTED.

FL-110
CIRCUIT DIAGRAM